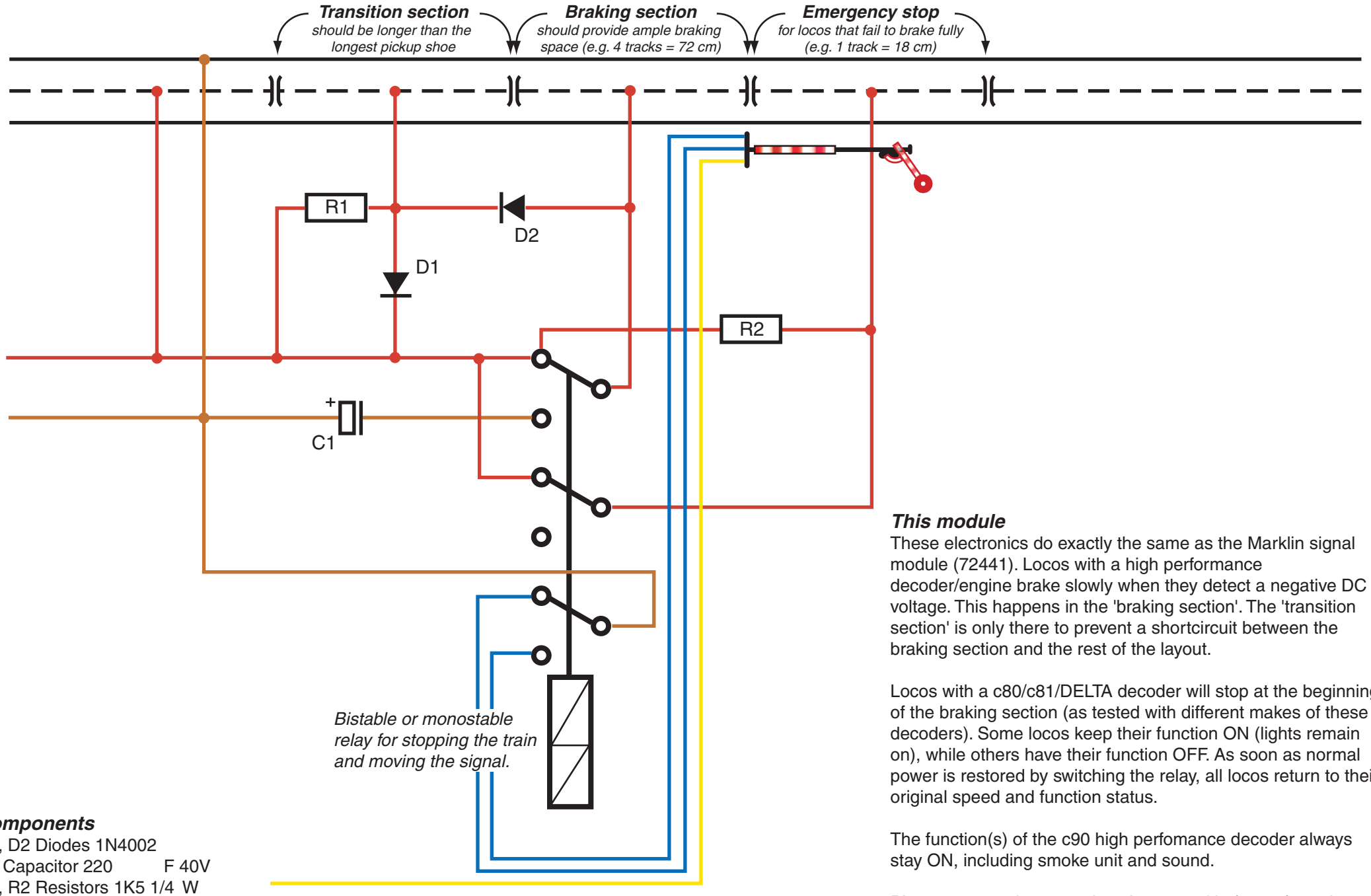

Components

D1, D2 Diodes 1N4002
C1 Capacitor 220 F 40V
R1, R2 Resistors 1K5 1/4 W

The resistors are only there to prevent Marklin decoders from 'forgetting' their settings.

This module

These electronics do exactly the same as the Marklin signal module (72441). Locos with a high performance decoder/engine brake slowly when they detect a negative DC voltage. This happens in the 'braking section'. The 'transition section' is only there to prevent a shortcircuit between the braking section and the rest of the layout.

Locos with a c80/c81/DELTA decoder will stop at the beginning of the braking section (as tested with different makes of these decoders). Some locos keep their function ON (lights remain on), while others have their function OFF. As soon as normal power is restored by switching the relay, all locos return to their original speed and function status.

The function(s) of the c90 high perfomance decoder always stay ON, including smoke unit and sound.

Please note: as long as a loco is stopped in front of a red signal, it cannot receive any commands from the Control Unit.

Huib Maaskant